Synchronisation and marine applications equipment

Synchro MAX / Synchro MAX PID

Synchro MAX / Synchro MAX PID

Equipment used to synchronise a generator with the network

Description

- All parameters can be programmed on the keyboard on the front panel.
- Digital unit with 4-digit display and 30 auxiliary LEDs.
- Voltage, generator frequency and network measurement and display (TRMS), including the unbalance between the generator and the network.
- Automatic synchronisation by simply programming the contactor closing time.
- Wide range of frequencies (35...80 Hz)
- Standard power supply: 110, 230 and 400 V ac
- 2 operating modes: Manual, automatic and assisted
- Digital adjustment (without potentiometers)
- PI / PID CONTROL (depending on the type) OF THE SPEED OF THE GENERATOR WITH BUILT-IN PULSE OUTPUT
- Protection with password.

Features

Auxiliary power supply	Alternating voltage
Standard values	110, 230, 400 V ac (-10 / +15 %)
Frequency margin	35 ... 450 Hz
Maximum consumption	10 V·A
Measurement circuit	
Measurement range	30 ... 150 V, 110 ... 600 V
Frequency	35 ... 80 Hz
Overload (permanent)	800 V
Consumption	< 500 uA
Accuracy	
Voltage (R.M.S.)	Cl 1 +/- 2 dig.
Frequency	+/- 0.01 Hz
Phase angle	+/- 0.5 º
Display	4 digits
Colour	Red, high efficiency
Presentation cycle	2 / s
Auxiliary LEDs	30
Ambient conditions	
Storage temperature	- 40 ... +70 ºC
Operating temperature	-10 ... + 65 ºC
Altitude	2000 m
Build features	
Box colour	Grey anthracite
Box material	Self-extinguishing ABS
Degree of protection	Front panel IP 54 (optional IP 65)
Weight	0.35 kg
Insulation voltage	2 kV, during 1 min, between the mechanism and the box
Standards	
BS 89, EN 60051, IEC 144, UL 94, DIN 43780, IEC 51, UNE 21318	

Synchronisation and marine applications equipment

Synchro MAX / Synchro MAX PID

Unit's front panel

Measurements displayed	
Phase	φ
Main voltage	V_{BB}
Generator voltage	V_{GEN}
Earth leakage voltage	V %
Main frequency	Fr_{BB}
Generator frequency	Fr_{GEN}
Frequency difference	FR %

Application

SynchroMax is a synchronism relay that has been designed to synchronise a generator with the network or with another generator used as reference. We can connect both in parallel in emergency or support applications when a greater power is needed.

Description

CIRCUTOR has two types of synchronism relays: **SYNCHRO MAX** and **SYNCHRO MAX PID**.

Synchro Max

Synchro Max is capable of adapting the generator's frequency with an integrated PI regulation algorithm, in order to connect it in parallel to the electrical network. In addition, it can be used to measure and display the voltage, phase and frequency parameters of the generator and network, as well as its differences.

Synchro Max PID

Synchro Max PID offers excellent standard **Synchro Max** measurement, display and programming features, with a powerful PID algorithm to control the generator's frequency.

This type of control turns **Synchro Max PID** into a quick synchronisation device and, therefore, it offers the ideal solution to reduce synchronisation costs, since it minimises the time invested in such procedures.

This type of control is perfect for small-scale hydraulic power plants, among many other applications.

Here is an example of how SYNCHRO MAX moves forward to a time t_{brk} (previously programmed by the user) to take into account the connection delay of the generator's contactor.

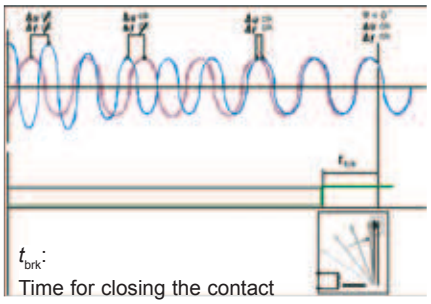

Synchronisation and marine applications equipment

Synchro MAX / Synchro MAX PID

References

Type	SYNCHRO MAX	SYNCHRO MAX PID
PID Control	No	Yes
Frequency	30 ... 70 Hz	
Dimensions (mm)		
a b c	96 96 62,9	
$V_{measurement}$		
30 ... 150	M14624	M14634
110 ... 600	M14625	M14635

Coding table

Synchro MAX	M	1	X	X	X	X	0	0	X
	Code						Internal Code		↑
	Voltage power supply			Standard (400 V)					0
				110 V					1
				230 V					2

Dimensions

SYNCROMAX

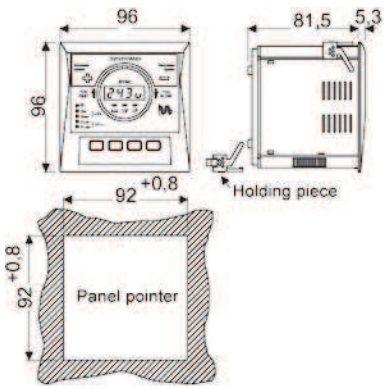

Connections

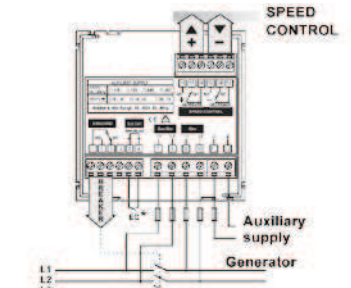

* EC (External Control): The connection being opened disables the synchronisation relay (breaker)